OCMJ4X8B-3 128X64 dots

Golden Palm Industry Co.,Ltd
Address:13-15F,Block E,Tian Ning Plaza, Jianshe 4th Road,Zhaoqing,Guangdong Province,China Postcode:526040
Tel:86-758-2317053 Fax:86-758-2317722
E-mail:support@gptlcm.cn syl@gptlcm.cn
http://www.gptlcm.cn

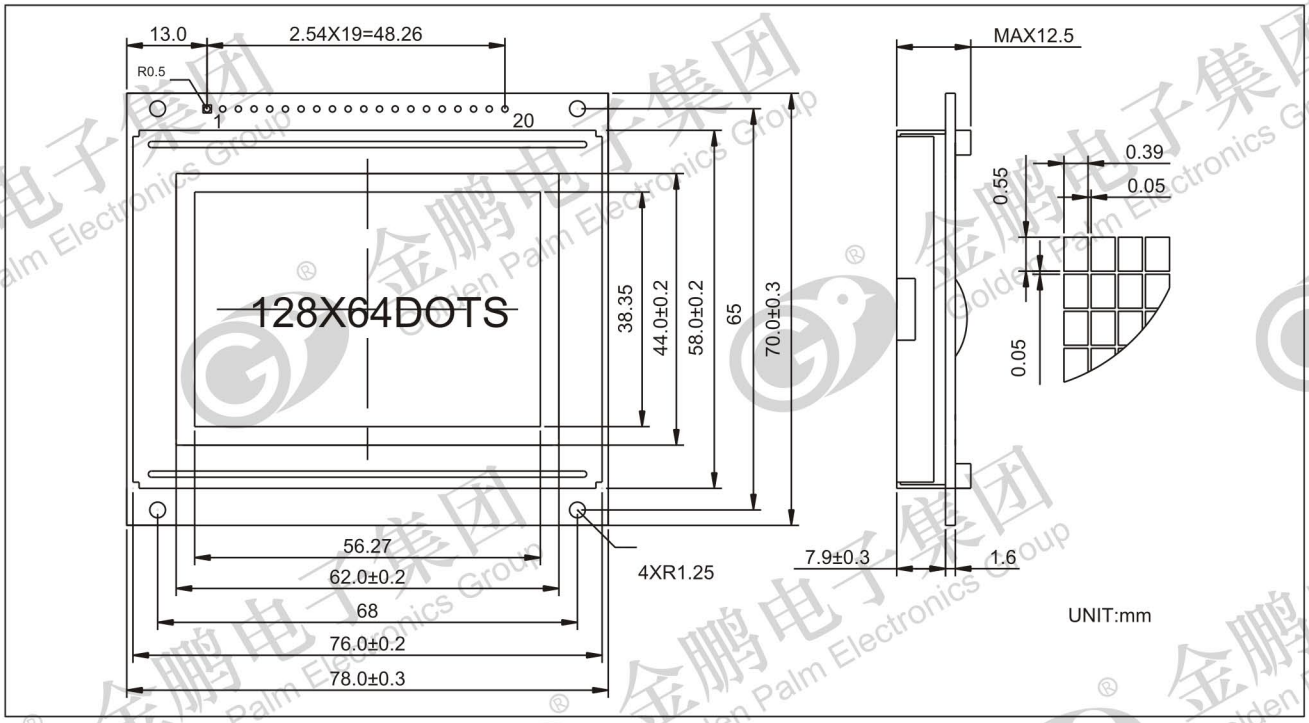

ABSOLUTE MAXIMUM RATINGS

Item	Symbol	Min.	Max.	Unit
Supply Voltage(Logic)	V_{DD}	-0.3	7.0	V
Supply Voltage(LCD)	V_O	VDD-19	VDD+0.3	V
Input Voltage	V_I	0	V_{DD}	V
Operating Temp.	T_{opr}	-20	70	℃
Storage Temp.	T_{stg}	-30	80	℃

MECHANICAL DATA

Item	Nominal Dimensions	Unit
Module Size(W X H X T)	78.0 X 70.0 X 12.5	mm
Viewing Area(W X H)	62.0 X 44.0	mm
Dot Pitch(W X H)	0.44 X 0.60	mm
Dot Size(W X H)	0.39 X 0.55	mm

ELECTRICAL CHARACTERISTICS (VDD=5V±0.25V)

Item	Symbol	Test Condition	Min.	Typ.	Max.	Unit
Input High Voltage	V_{IH}	--	0.7V_{DD}	--	V_{DD}	V
Input Low Voltage	V_{IL}	--	V_{SS}	--	0.3V_{DD}	V
Output High Voltage	V_{OH}	I_{OH} = -200uA	2.4	--	--	V
Output Low Voltage	V_{OL}	I_{OL} = 1.6mA	--	--	0.4	V
Supply Current	I_{DD}	V_{DD} = 5.0 V	--	1	1.5	mA
LCD Driving Voltage	V_{DD}-V_O	Ta = 25 ℃	--	4.5	5.0	V

PIN CONNECTIONS

Pin	Symbol	Level	Function
1	LED-	--	LED Backlight Power Supply
2	LED+	--	
3	VSS	--	GND(0V)
4	VDD	--	Supply Voltage for Logic (+5V)
5	DB0	H/L	Data Bus Line
6	DB1	H/L	
7	DB2	H/L	
8	DB3	H/L	
9	DB4	H/L	
10	DB5	H/L	
11	DB6	H/L	
12	DB7	H/L	
13	BUSY	H/L	H:Busy L:Ready for Input
14	REQ	H	H:Data Input L:Waiting for Busy signal
15	/RST	L	Reset Signal,Active Low
16	FG	--	Frame Ground
17	VEE	--	Negative Voltage Output(-10V)
18	VO	--	Supply Voltage for LCD
19	LED+	--	LED Backlight Power Supply
20	LED-	--	

BLOCK DIAGRAM

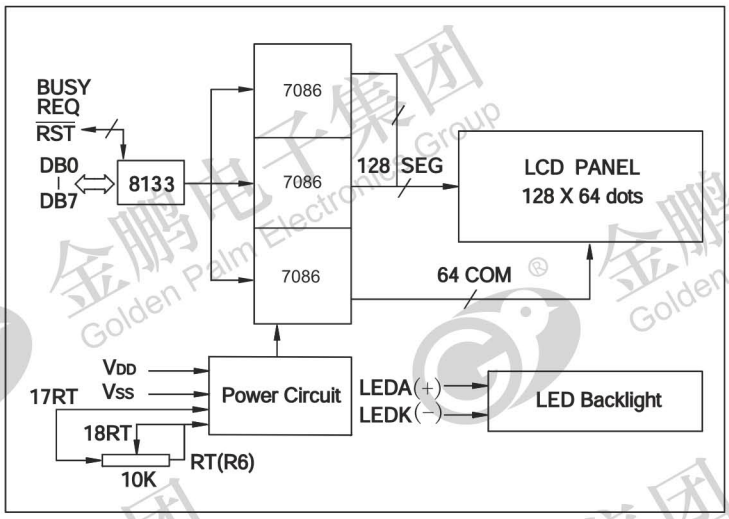

LED BACKLIGHT SPECIFICATIONS (Ta=25 ℃)

Item	Symbol	Typ.	Max.	Unit
Forward Voltage	V_f	4.1	4.3	V
Forward Current	I_f	110	--	mA
Emission Wave Length	λ_p	568	--	nm